Component Selection

Tuesday, September 03, 2024 9:32 PM

- Initially I wanted to use a STSPIN MCU which had integrated motor driver, this way I could directly drive the

MOSFETS from the MCU (reducing the need for additional parts).

- A downside is that it doesn't support 100% duty cycle for the highside mosfet (because it uses a bootstrap capacitor instead of a charge pump architecture for driving the highside MOSFET). What this means is that it is not suited for slow or no speed operation, cause the bootstrap capacitor needs to be frequently recharged.
-
- Development will also be easier using a separate drive module, it allows me to select another MCU.

POWER SECTION:

- ESD protection
- Reverse polarity protection
-
- Battery voltage monitoring (avoid over or under charging voltage)
- Battery current monitoring (over current protection)
-
- Current surge (loading capacitor protection)
- Power noise filtering
-
- BUCK REGULATOR/LDO
-
- USB POWER OR BATTERY POWER
- Allow for Battery Charging via USB.

Motor driver:

- DRV8304

https://www.ti.com/product/DRV8304#features

MOSFET driver: incase motordriver cannot sink/source enough current for fast mosfet switching

- TC4420/4429

https://ww1.microchip.com/downloads/aemDocuments/documents/APID/ApplicationNotes/ApplicationNotes/00798a.pdf

MOSFETS:

-

CSD88584Q5DC	40V	50A	https://www.ti.com/product/CSD88584Q5DC
CSD88599Q5DC	60V	40A	https://www.ti.com/product/CSD88599Q5DC

- Pros
  - Power block setup (2 MOSFETS in one)
  - Exposed metal allows for cooling
- Cons
  - Only 40/50A (can reduce at higher temps)

https://www.ti.com/lit/ds/symlink/csd17302q5a.pdf?ts=1726410462869&ref_url=https%253A%252F%252Fwww.google.com%252F

^^ single mosfet, better specs (higher Amp rating and lower Rds on)

Schematic Design

Thursday, August 15, 2024 11:48 PM

ESC Schematic Guide:
https://deepbluembedded.com/stm32-esc-pcb-design-foc-esc-bldc-schematic/

reference_
ESC_Design

Notes:

- [ ] How to handle inrush current? (look into BMS for batteries)
- [ ]

Electrical Components Know-How

Thursday, August 15, 2024 11:50 PM

MOSFETS:

N-channel have arrow towards gate : → current flows from drain to source

P-channel have arrow towards source: → current flows from source to drain

arrow is always connected to source

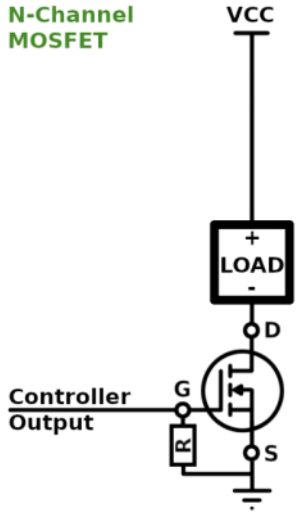

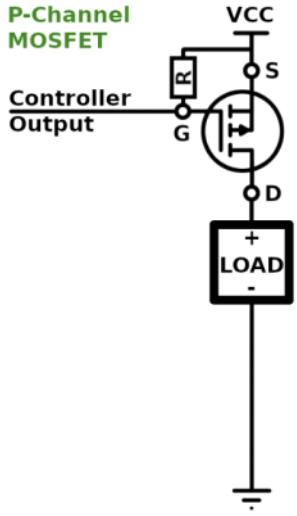

Low pass filter:

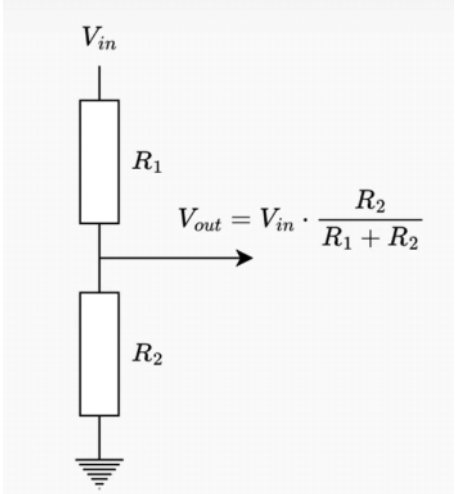
V_{in}
R_1
$V_{out} = V_{in} \cdot \frac{R_2}{R_1 + R_2}$
R_2

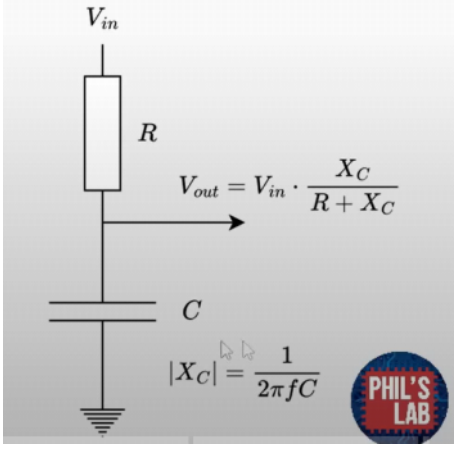
V_{in}
R
$V_{out} = V_{in} \cdot \frac{X_C}{R + X_C}$
C
$|X_C| = \frac{1}{2\pi f C}$
PHIL'S LAB

MCU selection

Friday, August 16, 2024 1:19 PM

STSPIN32G4:
https://www.st.com/en/motor-drivers/stspin32g4.html#documentation

STSPIN32FO:
https://www.st.com/en/motor-drivers/stspin32f0a.html#documentation

Decision: STSPIN32G4 (MORE POWERFUL VERSION)

Eval board: https://nl.farnell.com/en-NL/stmicroelectronics/evspin32g4/demo-board-3-ph-dc-brushless-motor/dp/3748739

https://be.farnell.com/en-BE/stmicroelectronics/evlspin32g4-act/eval-brd-ac-induction-motor-bldc/dp/4263225

B-G431 eval board schematics
https://www.digikey.ch/reference-designs/en/motor-control/2840

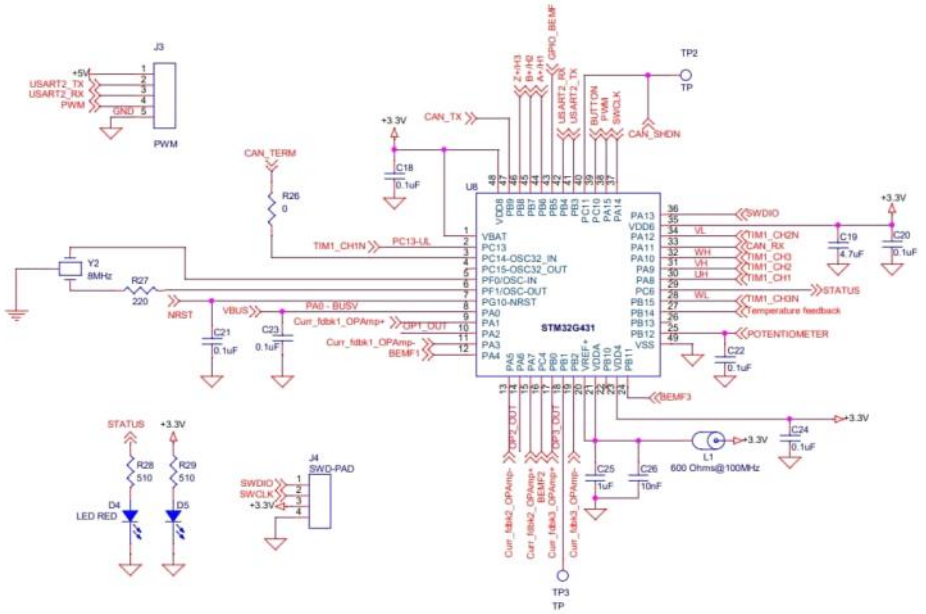

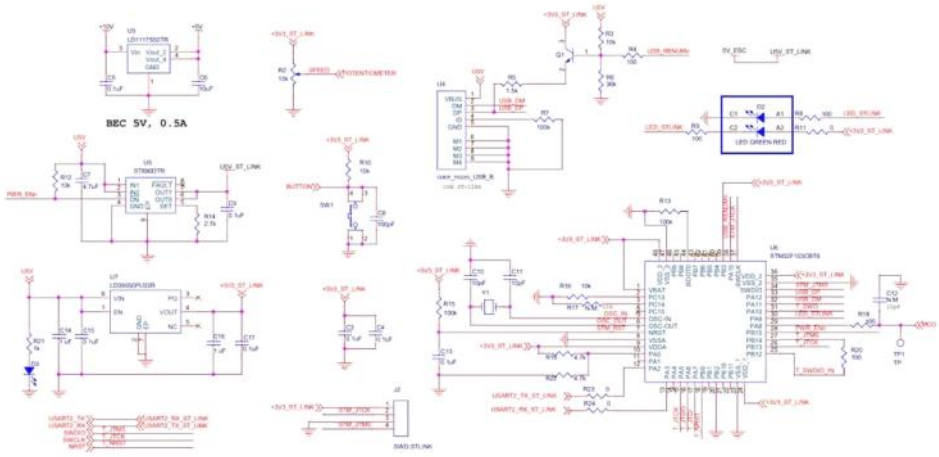

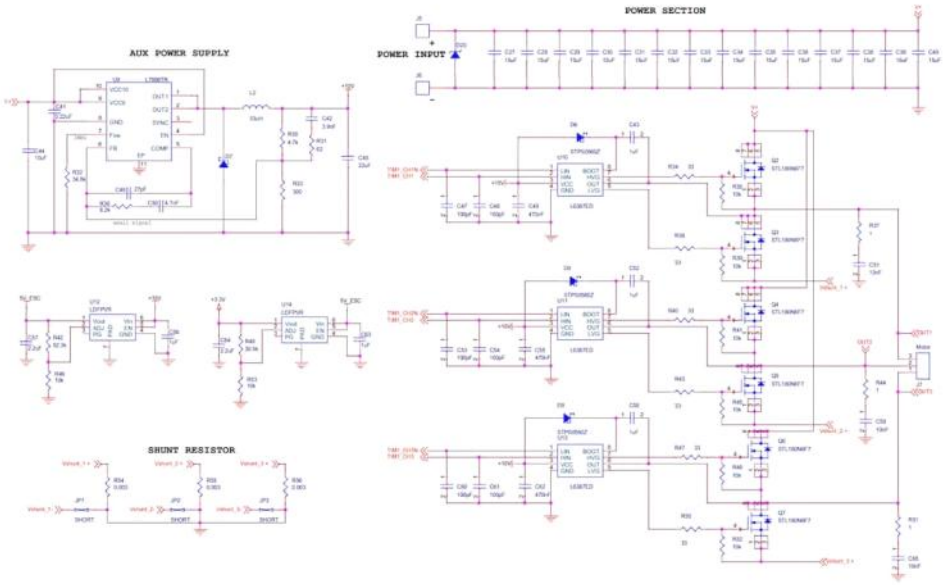
POWER SECTION
POWER INPUT
AUX POWER SUPPLY
SHUNT RESISTOR

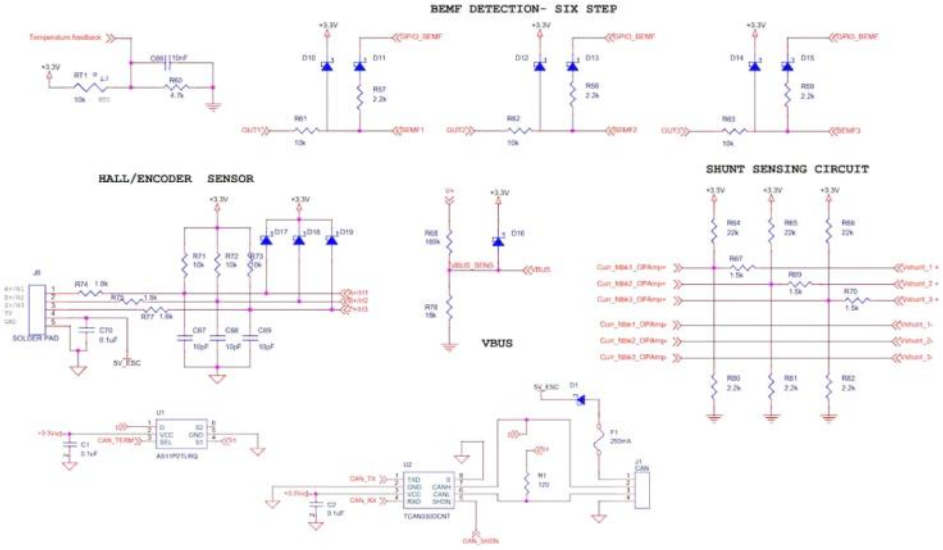
BEMF DETECTION- SIX STEP
HALL/ENCODER SENSOR
SHUNT SENSING CIRCUIT
VBUS

Requirements

Friday, August 16, 2024 7:41 PM

5s battery (15.0 < 18.5 < 21.0 Voltage)
Minimum of 15V required for consistent operation of MCU internal buck converter unless a buck boost regulator is implemented

Power block:
https://www.ti.com/product/CSD88599Q5DC

Requirements list:

- 4s lipo battery 3.2 < 3.7 < 4.2 -> 12.8 < 14.8 < 16.8
- IC -> Stm32g4
- Power block -> CSD88599Q5DC
- Temperature sensor for powerblocks
- Magnetic angle sensor
- Hall effect sensors
- Shunt resistor (current measurement per phase)
- Indicator LEDs
- USB programming + data communication
- SPI, UART and CAN are necessary
- SPI for high speed communication with sensors (AS5048 14 bit magnetic angle encoder)
- UART for datastreaming to computer/bluetooth/
- CAN for multipe sensor connections (reliability in noisy env)

To do: project timeli

Timeline

Sunday, September 01, 2024 11:38 PM

SCHEMATIC

- Power section
- Mosfet half bridges
- Current sensing
- Temperature sensing
- Angle sensor
- USB connection
- DEBUG connection
- Indicator LEDs

PCB DESIGN

ORDER PARTS

CONFIGURATION

PROGRAMMING

3D-MECHANICAL DESIGN

TESTING

BALANCING ALGORITHM

ALGORITHM TESTING